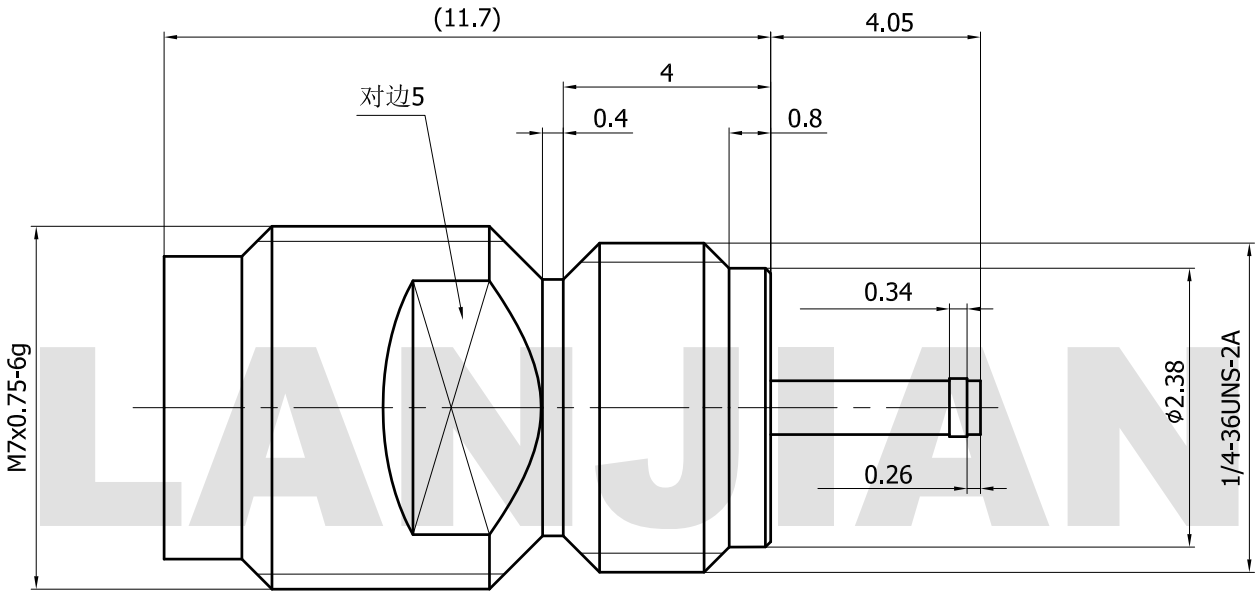

MATERIAL:

BODY:	STAINLESS STEEL/BRASS
CONTACT:	BERYLLIUM COPPER
INSULATOR:	PEI

PERFORMANCE:

IMPEDANCE:	50 OHMS
FREQUENCY:	DC TO 50 GHz
	≤1.25

THIS DOCUMENT CONTAINS CONFIDENTIAL AND PROPRIETARY INFORMATION THAT CANNOT BE REPRODUCED OR DIVULGED, IN WHOLE OR IN PART, WITHOUT WRITTEN AUTHORIZATION FROM "LANJIAN ELECTRONICS"

MATERIAL :

UNLESS OTHERWISE SPECIFIED: DIMENSIONS IN MM

TOLERANCES :

X.X ±0.20
X.XX ±0.10
X.XXX ±0.01

ANGULAR : ±1°
FILLETS R/C : ±0.10
SURFACE FINISH : Ra 1.6

DEBURR AND BREAK SHARP EDGES

	NAME	DATE	SIGNATURE
DRAWN	X.C.W	05/06/2022	
CHK'D	H.Z.Y	05/06/2022	
APPV'D	H.Z.Y	05/06/2022	
MFG			

PROJECTION	SIZE	SCALE
	A3	5:1

LANJIAN ELECTRONICS
38 Hengtong Road, Xinqu Dingmao
Zhenjiang, 212009, Jiangsu, P. R. China

TITLE

2.4-KYD-250112P405

DWG No.

REV. A

DO NOT SCALE THE DRAWING