PRODUCT DATA SHEET

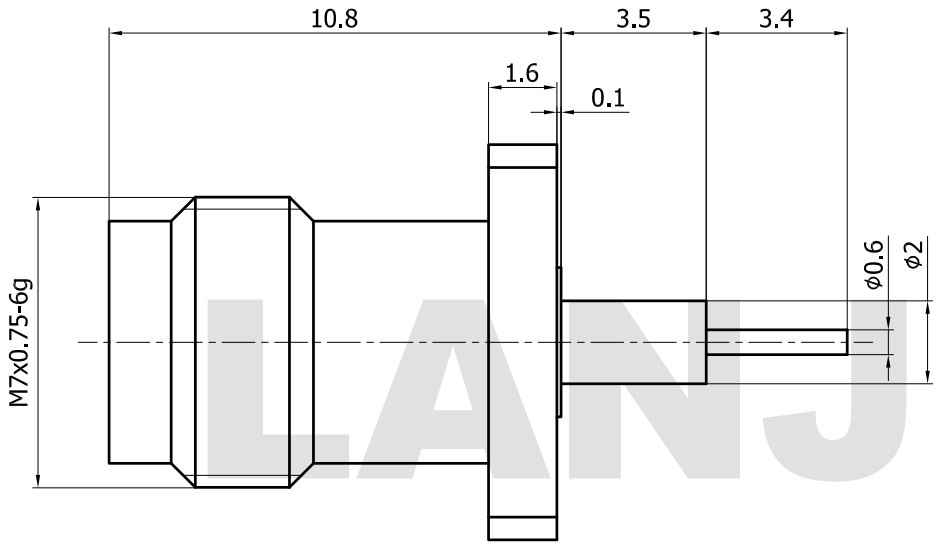

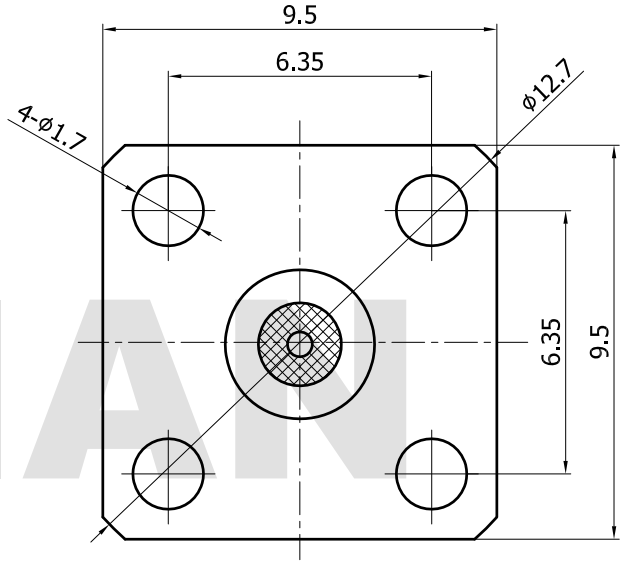

LANJIAN

MATERIAL:

BODY:	STAINLESS STEEL
CONTACT:	BERYLLIUM COPPER
INSULATOR:	PTFE

PERFORMANCE:

IMPEDANCE:	50 OHMS
FREQUENCY:	DC TO 50 GHz
VSWR:	≤1.30

THIS DOCUMENT CONTAINS CONFIDENTIAL AND PROPRIETARY INFORMATION THAT CANNOT BE REPRODUCED OR DIVULGED, IN WHOLE OR IN PART, WITHOUT WRITTEN AUTHORIZATION FROM "LANJIAN ELECTRONICS"

MATERIAL :

UNLESS OTHERWISE SPECIFIED: DIMENSIONS IN MM

TOLERANCES :

X.X ±0.20 ANGULAR : ±1°
X.XX ±0.10 FILLETS R/C : ±0.10
X.XXX ±0.01 SURFACE FINISH : Ra 1.6

DEBURR AND BREAK SHARP EDGES

	NAME	DATE	SIGNATURE
DRAWN	X.C.W	05/22/2023	
CHK'D	H.Z.Y	05/22/2023	
APPV'D	H.Z.Y	05/22/2023	
MFG			

PROJECTION	SIZE	SCALE
	A3	8:1

LANJIAN ELECTRONICS
38 Hengtong Road, Xinqu Dingmao
Zhenjiang, 212009, Jiangsu, P. R. China

TITLE

2.4-KFD4-095060P340

DWG No.

REV. A

DO NOT SCALE THE DRAWING